Spring-loaded test probe

GKS-113 303 400 R 3002 C

Item GKS-113-1337

GO TO PRODUCT

ingun®
Partner for Future Technology

- Robust test probes with distinctive collar (stop) on the barrel
- Optimum adjustment of the stroke ratios in the test fixture: The collar is available in different heights, which, in combination with the receptacles, allows a range of installation heights
- Stainless steel versions for temperatures from -100 °C up to +200 °C available

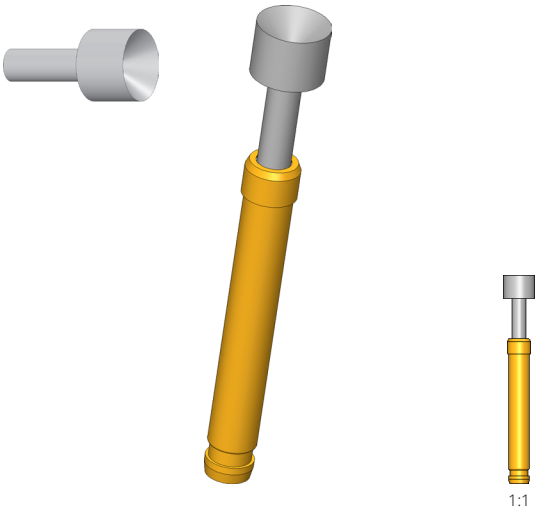

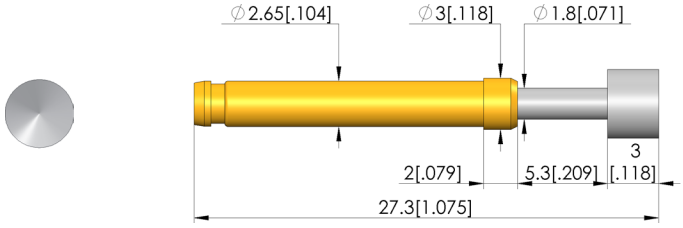

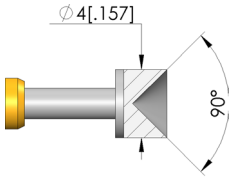

General data

Product group:	ICT / FCT (in-circuit test and function test
Sub-product group:	Metric standard
Series:	GKS-113
Grid:	4.5 mm [177 mil]
Contacting from:	Pin, posts
Magnetic:	Yes
Installation type:	Plug-in
Quick-exchange system:	Yes
Adjustable installation height:	No
Non-rotating:	No
Compatible receptacle(s):	KS-113, KS-113 23
Min. temperature:	- 100 °C [- 212 °F]
Max. temperature:	+ 200 °C [+ 392 °F]
RoHS-compliant:	RoHS-3;6c

Electrical data

Current load capacity / rated current:	8 A
Typical resistance (Ri):	<100 mOhm

Mechanical data

Total length:	27.3 mm [1.07 in]
Barrel diameter:	2.65 mm [.104 in]
Maximum stroke:	5.3 mm [.208 in]
Spring pre-load:	0.71 N [2.55 ozf]
Collar height:	02
Spring force at working stroke:	3 N [10.7 ozf]
Recommended working stroke:	4 mm [.157 in]

Tip style data

Tip style:	03 inverse cone
Tip diameter:	4 mm [.157 in]
Tip style surface:	R rhodium
Tip style material:	3 CuBe

Spring-loaded test probe

GKS-113 303 400 R 3002 C

Item GKS-113-1337

GO TO PRODUCT

Partner for Future Technology

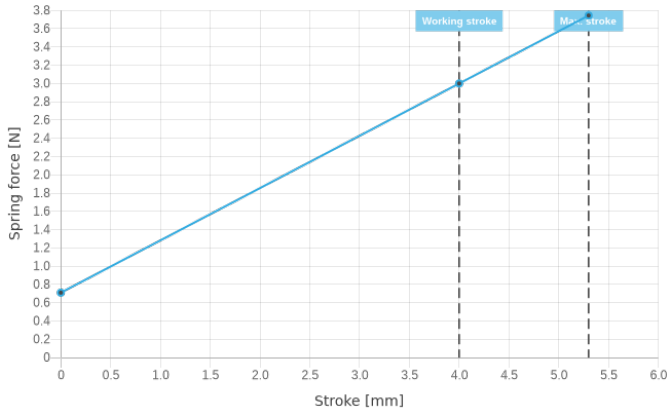

INGUN Prüfmittelbau GmbH
Max-Stromeyer-Straße 162
78467, Constance, Germany
Phone +49 7531 8105-0
Customer hotline +49 7531 8105-888
Fax +49 7531 8105-65
info@ingun.com

Prices and delivery times on request.
Technical changes reserved. 01/25_GB