Spring-loaded test probe

GKS-103 102 230 A 0802

Item GKS-103-0001

GO TO PRODUCT

ingun®
Partner for Future Technology

- Robust test probes with distinctive collar (stop) on the barrel
- Optimum adjustment of the stroke ratios in the test fixture: The collar is available in different heights, which, in combination with the receptacles, allows a range of installation heights
- Stainless steel versions for temperatures from -100 °C up to +200 °C available

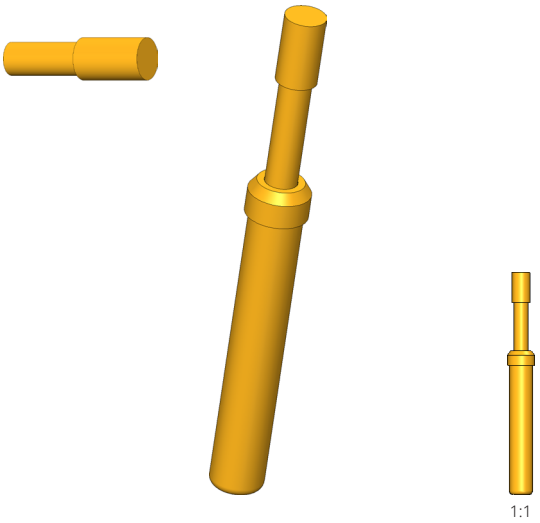

1:1

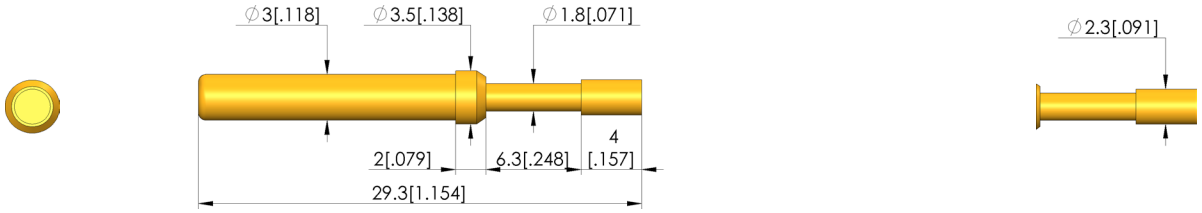

General data

Product group:	ICT / FCT (in-circuit test and function test
Sub-product group:	Metric standard
Series:	GKS-103
Grid:	4 mm [157 mil]
Contacting from:	Pin, posts, bead, flat contact
Magnetic:	Yes
Installation type:	Plug-in
Quick-exchange system:	Yes
Adjustable installation height:	No
Non-rotating:	No
Compatible receptacle(s):	KS-103, KS-103 23
Min. temperature:	- 40 °C [- 104 °F]
Max. temperature:	+ 80 °C [+ 176 °F]
RoHS-compliant:	RoHS-3;6c

Electrical data

Current load capacity / rated current:	5 A
Typical resistance (Ri):	<30 mOhm

Mechanical data

Total length:	29.3 mm [1.15 in]
Barrel diameter:	3 mm [.118 in]
Maximum stroke:	6 mm [.236 in]
Spring pre-load:	0.27 N [.971 ozf]
Collar height:	02
Spring force at working stroke:	0.8 N [2.87 ozf]
Recommended working stroke:	4.8 mm [.188 in]

Tip style data

Tip style:	02 flat
Tip diameter:	2.3 mm [.090 in]
Tip style surface:	A gold
Tip style material:	1 brass

Spring-loaded test probe
GKS-103 102 230 A 0802
Item GKS-103-0001

GO TO PRODUCT

ingun®
Partner for Future Technology

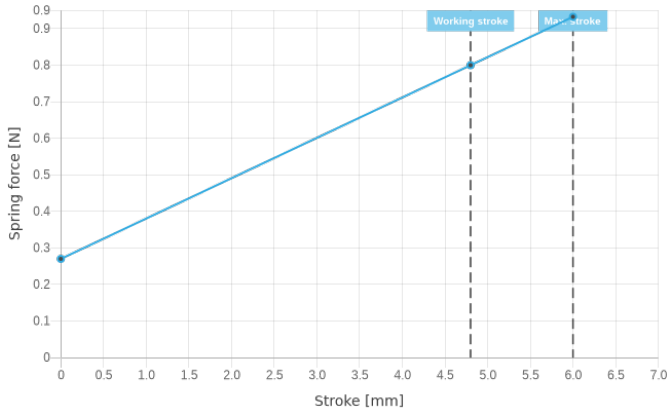

INGUN Prüfmittelbau GmbH
Max-Stromeyer-Straße 162
78467, Constance, Germany
Phone +49 7531 8105-0
Customer hotline +49 7531 8105-888
Fax +49 7531 8105-65
info@ingun.com

Prices and delivery times on request.
Technical changes reserved. 01/25_GB