Pneumatic test probe

PKS-399 201 200 R 3702 2H

Item PKS-399-0044

GO TO PRODUCT

ingun®
Partner for Future Technology

- Universal pneumatic probes for a wide range of applications, e.g., for contacting test pads, activation of switches, contacting of difficult-to-access test points, or creation of interfaces.
- When using PKS probes, a separate actuating mechanism may not be necessary
- PKS are retracted in the home position. When pressure is applied, the plunger extends
- The electrical connection is ensured by installation using a receptacle
- Designed as high-current version with higher current load capacity

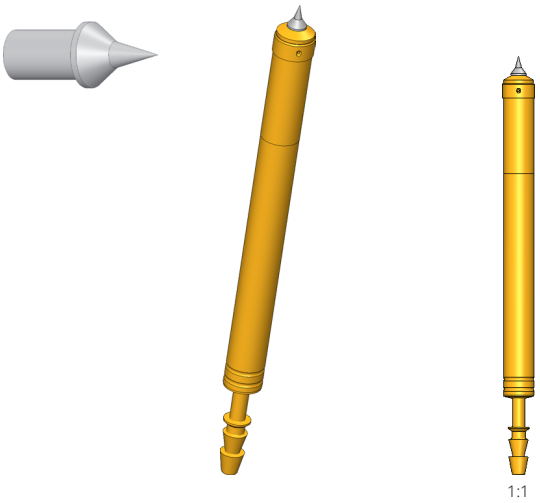

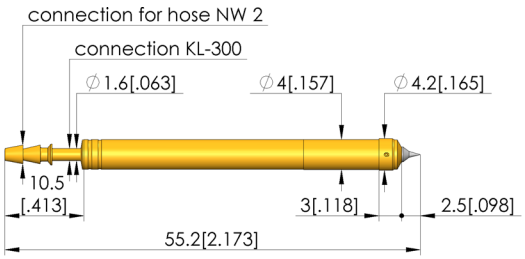



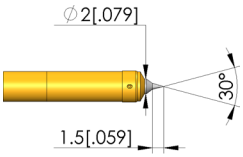

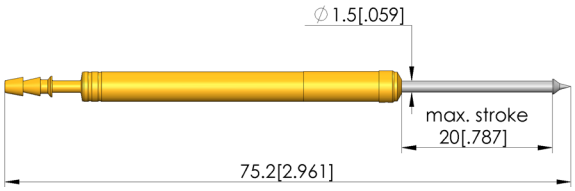

Pneumatic test probe

PKS-399 201 200 R 3702 2H

Item PKS-399-0044

GO TO PRODUCT

ingun®
Partner for Future Technology

General data

Product group:	Pneumatic test probe
Sub-product group:	PKS (pressed in)
Series:	PKS-399 2H high current version, NW2
Grid:	4.5 mm [177 mil]
Contacting from:	Pad
Magnetic:	Yes
Installation type:	Plug-in
Quick-exchange system:	No
Type of test probe connection:	Clip
PKS operating pressure:	6 bar [87.0 psi]
Adjustable installation height:	No
Non-rotating:	No
Compatible connector(s):	KL-300
Compatible receptacle(s):	KS-399
Min. temperature:	+ 0 °C [+ 32 °F]
Max. temperature:	+ 80 °C [+ 176 °F]
RoHS-compliant:	RoHS-3;6a;6c

Electrical data

Current load capacity / rated current:	10 A
Typical resistance (Ri):	<30 mOhm

Mechanical data

Total length:	55.2 mm [2.17 in]
Barrel diameter:	4 mm [.157 in]
Maximum stroke:	20 mm [.787 in]
Spring pre-load:	0.91 N [3.27 ozf]
Collar height:	02
Spring force at working stroke:	3.7 N [13.3 ozf]
Recommended working stroke:	12 mm [.472 in]

Tip style data

Tip style:	01 30° needle tip, self-cleaning
Tip diameter:	2 mm [.078 in]
Tip style surface:	R rhodium
Tip style material:	2 steel

INGUN Prüfmittelbau GmbH
Max-Stromeyer-Straße 162
78467, Constance, Germany
Phone +49 7531 8105-0
Customer hotline +49 7531 8105-888
Fax +49 7531 8105-65
info@ingun.com

Learn more about
Test probes

Prices and delivery times on request.
Technical changes reserved. 02/25_GB

ingun.com