# Test Probe

## GKS-113 302 080 A 3002

Item GKS-113-0316

GO TO PRODUCT

ingun®
Partner for Future Technology

- Robust test probes with distinctive collar (stop) on the barrel
- Optimum adjustment of the stroke ratios in the test fixture: The collar is available in different heights, which, in combination with the receptacles, allows a range of installation heights
- Stainless steel versions for temperatures from -100 °C up to +200 °C available

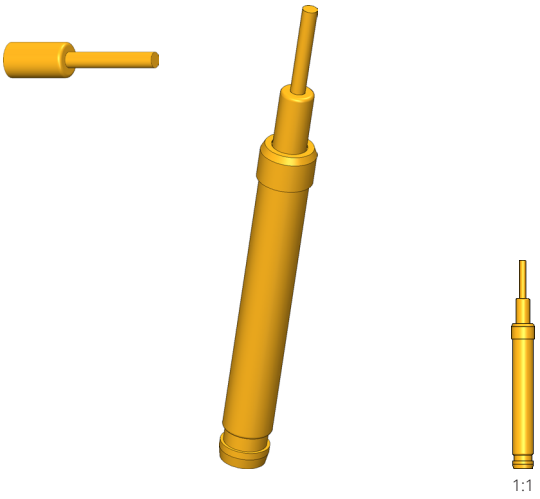


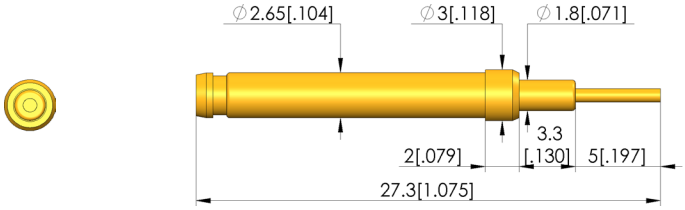


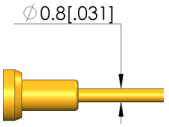


### General data

| | |
|---|---|
| Product group: | ICT / FCT (in-circuit test and function test |
| Sub-product group: | Metric standard |
| Series: | GKS-113 |
| Grid: | 4 mm [157 mil] |
| Contacting from: | Pin, posts, bead, flat contact |
| Magnetic: | Yes |
| Installation type: | Plug-in |
| Quick-exchange system: | Yes |
| Adjustable installation height: | No |
| Non-rotating: | No |
| Compatible receptacle(s): | KS-113, KS-113 23 |
| Min. temperature: | - 40 °C [- 104 °F] |
| Max. temperature: | + 80 °C [+ 176 °F] |
| RoHS-compliant: | RoHS-3;6c |

### Electrical data

| | |
|---|---|
| Current load capacity / rated current: | 8 A |
| Typical resistance (Ri): | <30 mOhm |

### Mechanical data

| | |
|---|---|
| Total length: | 27.3 mm [1.07 in] |
| Barrel diameter: | 2.65 mm [.104 in] |
| Maximum stroke: | 5.3 mm [.208 in] |
| Spring pre-load: | 0.8 N [2.87 ozf] |
| Collar height: | 02 |
| Spring force at working stroke: | 3 N [10.7 ozf] |
| Recommended working stroke: | 4 mm [.157 in] |

### Tip style data

| | |
|---|---|
| Tip style: | 02 flat |
| Tip diameter: | 0.8 mm [.031 in] |
| Tip style surface: | A gold |
| Tip style material: | 3 CuBe |

Test Probe

# GKS-113 302 080 A 3002

Item GKS-113-0316

GO TO PRODUCT

ingun®
Partner for Future Technology

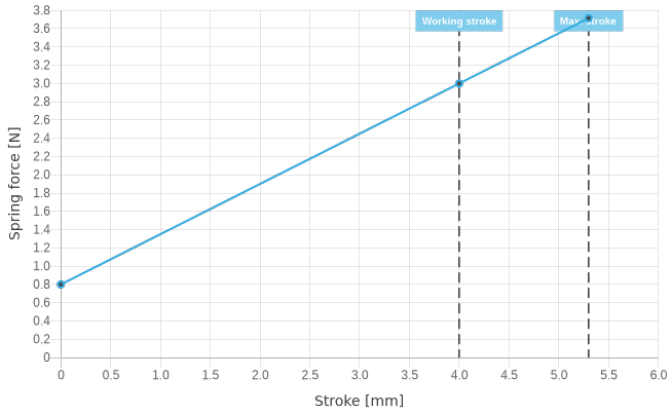


**INGUN Prüfmittelbau GmbH**
Max-Stromeyer-Straße 162
78467, Constance, Germany
Phone +49 7531 8105-0
Customer hotline +49 7531 8105-888
Fax +49 7531 8105-65
info@ingun.com

Prices and delivery times on request.
Technical changes reserved. 01/25_GB