Switching probe (NO)

SKS-115 306 100 A 3002 M

Item SKS-115-0015

GO TO PRODUCT

ingun®
Partner for Future Technology

- For a wide range of applications: performs components detection check, is a switch for detecting closed/open states, and a signal transmitter for process control
- Various collar heights are available on the receptacles to adjust the installation height
- The installation height can be varied, and the position of the switching point can be precisely adjusted via the probe's thread. The SKS is secured in the correct position by crimp point in the KS.
- The electrical connection is ensured by installation using a receptacle

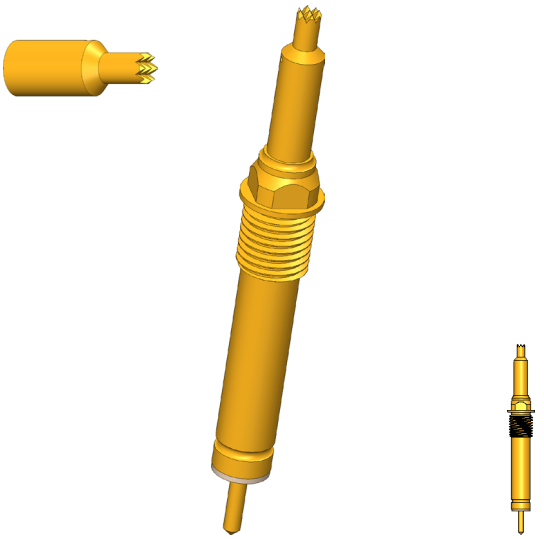

1:1

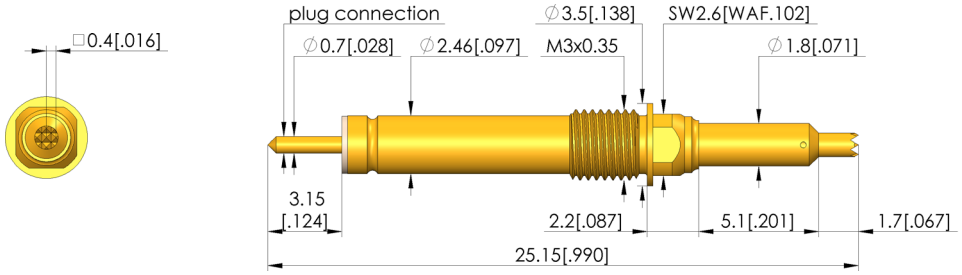

General data

Product group:	Switching probes
Sub-product group:	SKS (screwed-in)
Series:	SKS-115 M screw-in
Grid:	4 mm [157 mil]
Contacting from:	Pin, Post, Flat contact
Magnetic:	Yes
Installation type:	Screw-in
Quick-exchange system:	Yes
Adjustable installation height:	No
Non-rotating:	No
Screw-in torque:	3 - 5 cNm [.265 - .442 lbf·in]
Compatible receptacle(s):	KS-115 M
Min. temperature:	- 40 °C [- 104 °F]
Max. temperature:	+ 80 °C [+ 176 °F]
RoHS-compliant:	RoHS-3;6c

Electrical data

Current load capacity / rated current:	3 A

Mechanical data

Total length:	25.15 mm [.990 in]
Barrel diameter:	2.46 mm [.096 in]
Maximum stroke:	5 mm [.196 in]
Spring pre-load:	0.84 N [3.02 ozf]
Collar height:	02
Switch path:	1.7 mm [.066 in]
Switching point:	7.3 mm [.287 in]
Spring force at switching point:	1.44 N [5.17 ozf]

Tip style data

Tip style:	06 serrated
Tip diameter:	1 mm [.039 in]
Tip style surface:	A gold
Tip style material:	3 CuBe

INGUN Prüfmittelbau GmbH
Max-Stromeyer-Straße 162
78467, Constance, Germany
Phone +49 7531 8105-0
Customer hotline +49 7531 8105-888
Fax +49 7531 8105-65
info@ingun.com

Learn more about
Test probes

Prices and delivery times on request.
Technical changes reserved. 02/25_GB

ingun.com