Test Probe

GKS-913 102 230 A 2502 1

Item GKS-913-0010

GO TO PRODUCT

ingun®
Partner for Future Technology

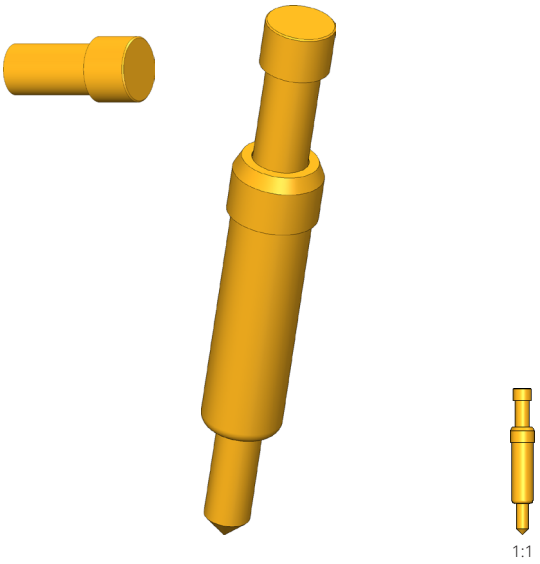

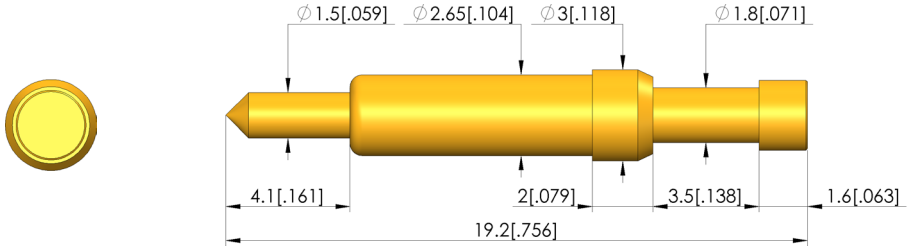

General data

Product group:	ICT / FCT (in-circuit test and function test
Sub-product group:	Metric standard
Series:	GKS-913 1
Grid:	4 mm [157 mil]
Contacting from:	Pin, posts, bead, flat contact
Magnetic:	Yes
Installation type:	Solderable
Quick-exchange system:	No
Type of test probe connection:	Solder connection
Adjustable installation height:	No
Non-rotating:	No
Min. temperature:	- 40 °C [- 104 °F]
Max. temperature:	+ 80 °C [+ 176 °F]
RoHS-compliant:	RoHS-3;6c

Electrical data

Current load capacity / rated current:	5 A
Typical resistance (Ri):	<20 mOhm

Mechanical data

Total length:	19.2 mm [.755 in]
Barrel diameter:	2.65 mm [.104 in]
Maximum stroke:	3.5 mm [.137 in]
Spring pre-load:	0.75 N [2.69 ozf]
Collar height:	02
Spring force at working stroke:	2.5 N [8.99 ozf]
Recommended working stroke:	2.8 mm [.110 in]

Tip style data

Tip style:	02 flat
Tip diameter:	2.3 mm [.090 in]
Tip style surface:	A gold
Tip style material:	1 brass

ICT/FCT TEST PROBES

Test Probe

GKS-913 102 230 A 2502 1

Item GKS-913-0010

GO TO PRODUCT

ingun®
Partner for Future Technology

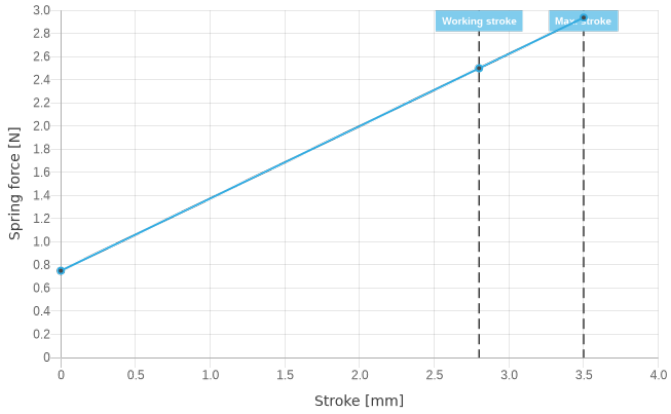

INGUN Prüfmittelbau GmbH
Max-Stromeyer-Straße 162
78467, Constance, Germany
Phone +49 7531 8105-0
Customer hotline +49 7531 8105-888
Fax +49 7531 8105-65
info@ingun.com

Prices and delivery times on request.
Technical changes reserved. 02/25_GB

Learn more about
ICT/FCT Test probes

ingun.com

ICT/FCT TEST PROBES