Switching probe (NO)

SKS-559 405 600 U 1001 M

Item SKS-559-0001

GO TO PRODUCT

Partner for Future Technology

- Switching probe for detection test of plugs in test modules from the side
- SKS probe is activated by a ball and is resistant to side forces
- Particularly suitable for limited working spaces in 374 Mil grids

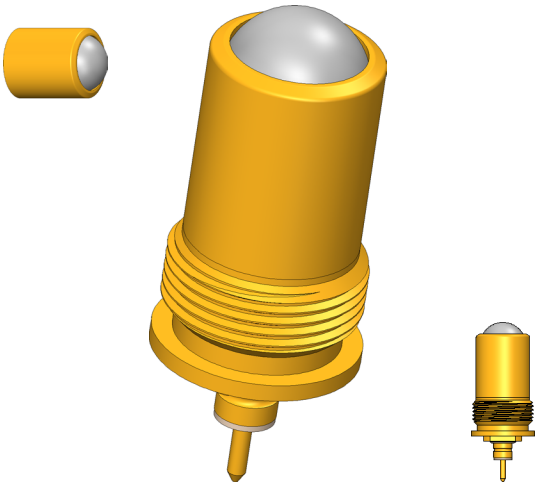

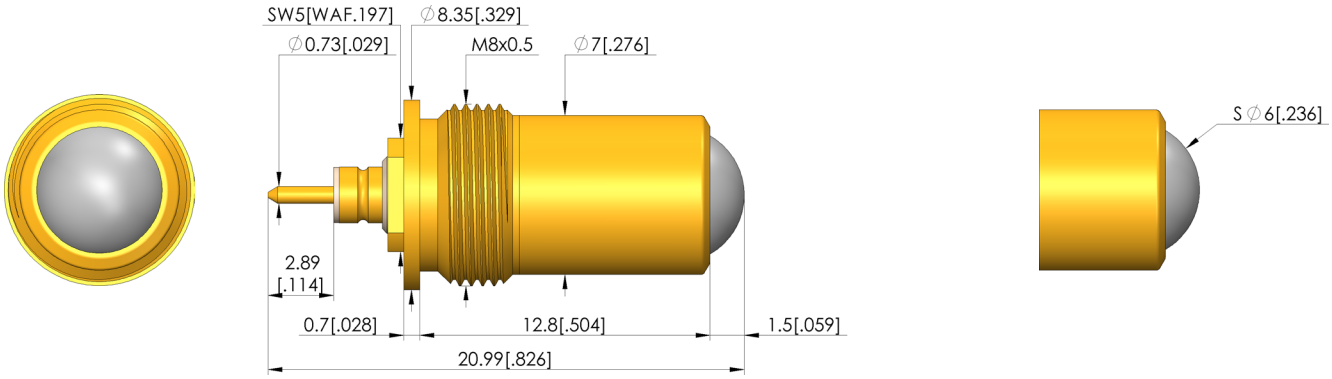

General data

Product group:	Switching probes
Sub-product group:	SKS (screwed-in)
Series:	SKS-559 M screw-in
Grid:	9.5 mm [374 mil]
Contacting from:	Pad, Female connector
Magnetic:	Yes
Installation type:	Screw-in
Quick-exchange system:	No
Adjustable installation height:	No
Non-rotating:	No
Screw-in torque:	10 - 20 cNm [.885 - 1.77 lbf·in]
Compatible receptacle(s):	KS-559 M
Min. temperature:	- 40 °C [- 104 °F]
Max. temperature:	+ 80 °C [+ 176 °F]
RoHS-compliant:	RoHS-3;6c

Electrical data

Current load capacity / rated current:	10 A

Mechanical data

Total length:	21 mm [.826 in]
Barrel diameter:	7 mm [.275 in]
Maximum stroke:	1.5 mm [.059 in]
Spring pre-load:	0.7 N [2.51 ozf]
Collar height:	01
Switch path:	0.7 mm [.027 in]
Switching point:	13.6 mm [.535 in]
Spring force at switching point:	0.85 N [3.05 ozf]

Tip style data

Tip style:	05 bullet-nosed (full radius)
Tip diameter:	6 mm [.236 in]
Tip style surface:	U unplated
Tip style material:	4 stainless steel

INGUN Prüfmittelbau GmbH
Max-Stromeyer-Straße 162
78467, Constance, Germany
Phone +49 7531 8105-0
Customer hotline +49 7531 8105-888
Fax +49 7531 8105-65
info@ingun.com

Learn more about
Test probes

Prices and delivery times on request.
Technical changes reserved. 02/25_GB

ingun.com